SOLATUBE 750 DS-C
(21 IN / 530 MM)
11" SELF FLASHING
HARD CEILING WITH DAYLIGHT DIMMER
AND OPTIONAL INNER DOME

REVISIONS				
ECO	REV.	DESCRIPTION	DATE	INC.
	1	INITIAL RELEASE	3/14/2008	CS

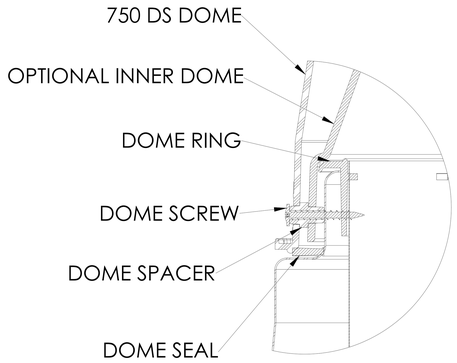

DETAIL B
SCALE 3 : 1

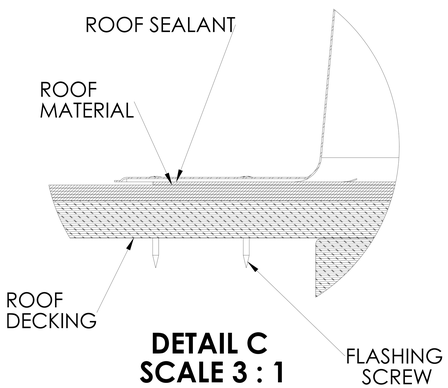

DETAIL C
SCALE 3 : 1

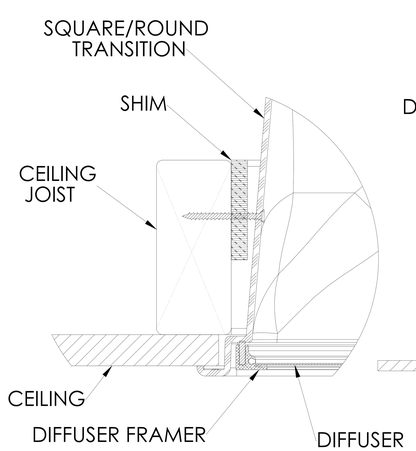

DETAIL D
SCALE 3 : 1

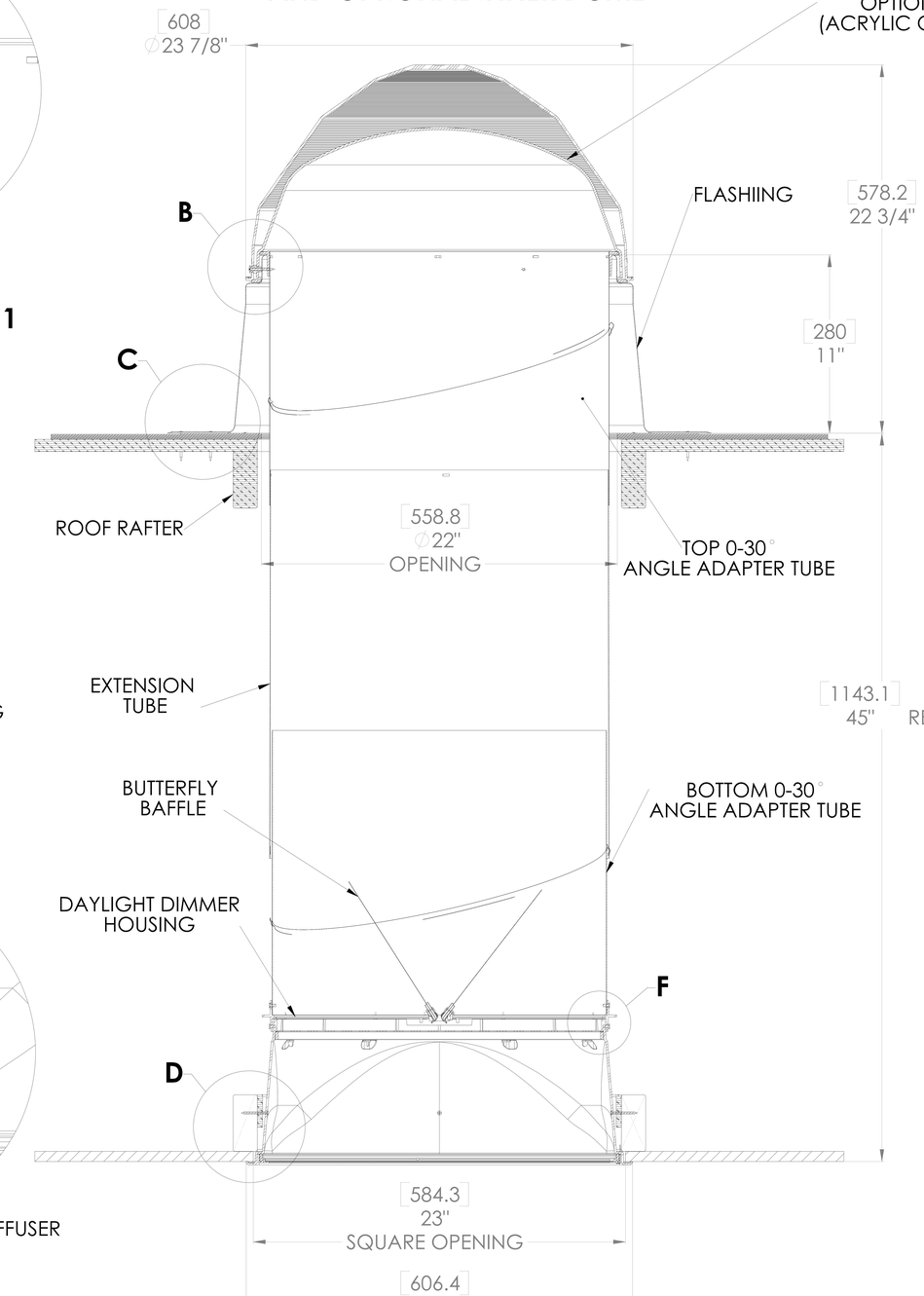

FULL SECTION
SCALE 1:1

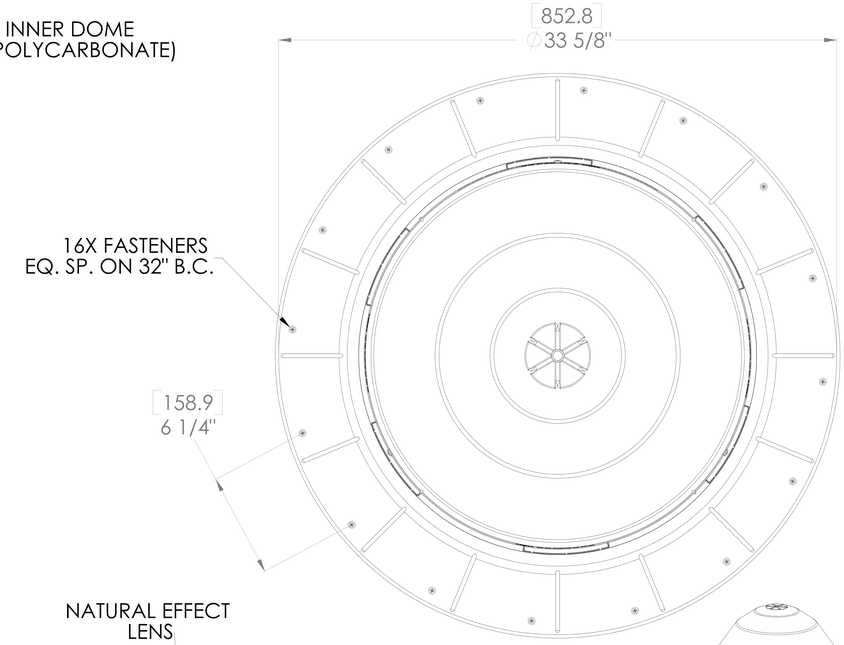

TOP VIEW
SCALE 1 : 1

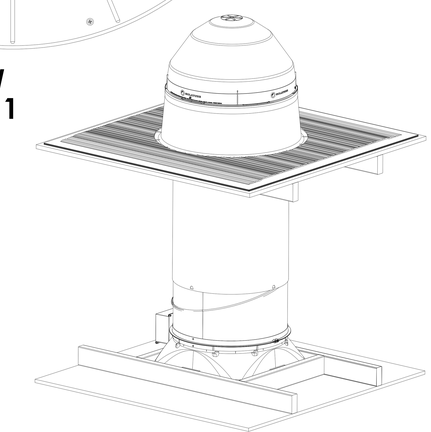

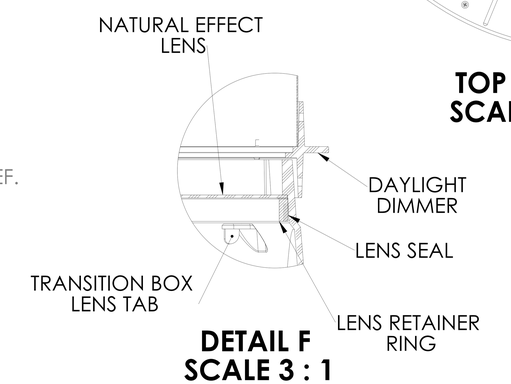

DETAIL F
SCALE 3 : 1

NOTES:

1. STRUCTURAL ELEMENTS (PLYWOOD, RAFTERS, DRYWALL ETC.) BY OTHERS & SHOWN FOR REFERENCE ONLY.
2. ALL TUBE JOINTS & SEAMS TAPED WITH 2" FOIL TAPE (NOT SHOWN).
3. DIMENSIONS IN BRACKETS ARE METRIC UNLESS OTHERWISE SPECIFIED.
4. 6" MIN CLEARANCE SHOULD BE MAINTAINED FROM ALL SOLATUBE COMPONENTS AND OTHER PLENUM COMPONENTS.

UNLESS OTHERWISE SPECIFIED:
DIMENSIONS ARE IN INCHES
TOLERANCES:
ANGULAR: ±0.5°
.X ± .1
.XX ± .02
.XXX ± .005

SOLATUBE INTERNATIONAL, INC.
COPYRIGHT 2008
WWW.SOLATUBE.COM

SOLATUBE
2210 OAK RIDGE WAY
VISTA, CALIFORNIA 92081-8341
PH (760) 597-4400

MATERIAL
--
--

FINISH
--

DO NOT SCALE DRAWING

DRAWN BY: STEVENS	DATE: 7/1/08
CHECKED BY: --	DATE: --
APPROVED BY: --	DATE: --

TITLE: **750 DS-C SELF FLASHING HARD CEILING W/DD**

SIZE | DWG. NO. **WEB-750-SF-HC-DD** | REV **1**

SCALE: 1:1 | SHEET 1 OF 1